W200HD-RH Holes

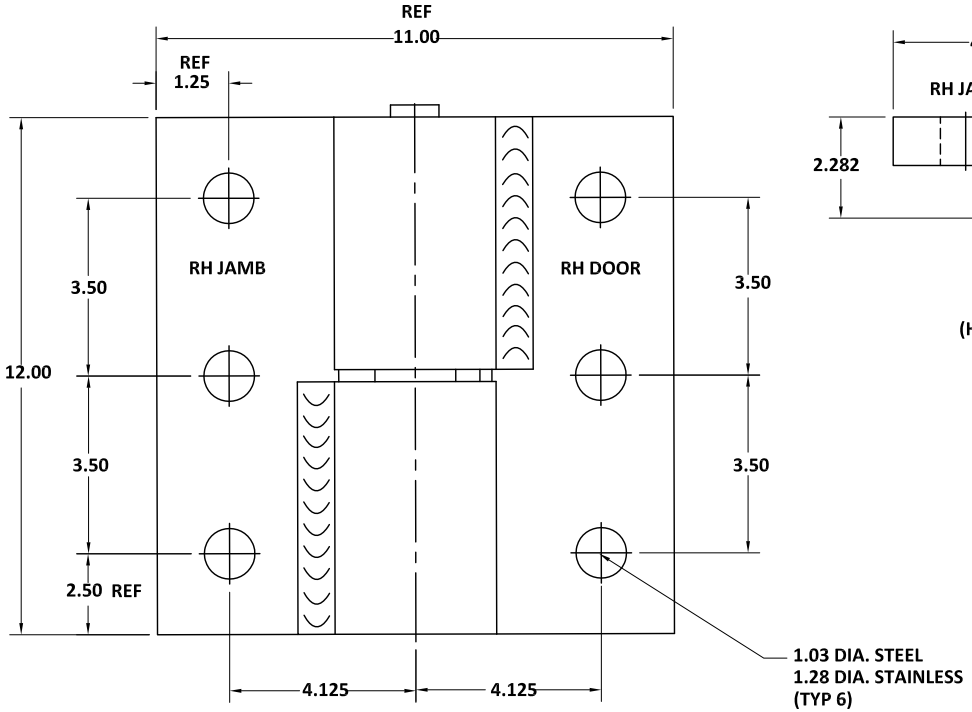

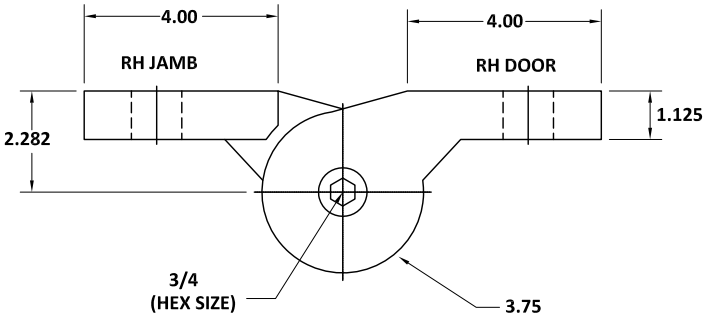

(DO NOT SCALE DRAWING)